FIG.K 809 SGSGV CL600 2"-2 1/2" SW

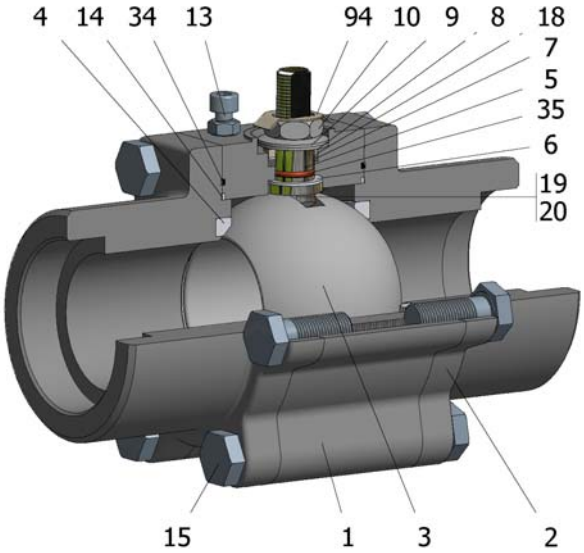

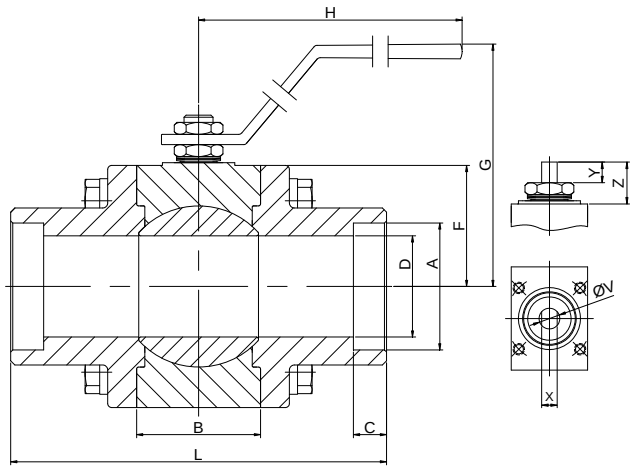

Position	Description	Material
01	Body 1	C.S. A350 LF2/A-105
02	Body 2	C.S. A350 LF2/A-105
03	Ball	A182 F316/316L
04	Seat	PTFE+CG
05	Stem	S.S. AISI 316/316L
06	Stem seal	PTFE+CG
07	Stem packing 1	Graphite
08	Gland packing	S.S. AISI 316
09	Spring washer	S.S. AISI 301
10	Stem nut	S.S. AISI 304
13	Stop bolt	S.S. (316)
14	Body seal 1	PTFE+CG
15	Body bolt	A320 L7M
16	Handle	PAINTED C.S.
18	Thrust washer	PTFE+CG
19	Spring	S.S. AISI 316
20	Antistatic ball	S.S. AISI 316
34	Body seal 2	Graphite
35	O ring stem	FKM
94	Stop washer	S.S. AISI 301

General features

Three pieces.
Full bore.
Soft seat.
Bidirectional.
Anti Blow out proof stem.
Autoadjustable packing.
Anti static device.
Self-cavity pressure relief.

Standards

Top flange ISO 5211
Socket-welding ends B16.11
Materials according to NACE MR0175
Design B16.34
Testing API 598, BS 6755-1

Official approvals

CERTIFICATE FIRE SAFE
ATEX 2014/34/EU
PED 2014/68/EU
SIL 3 CAPABLE

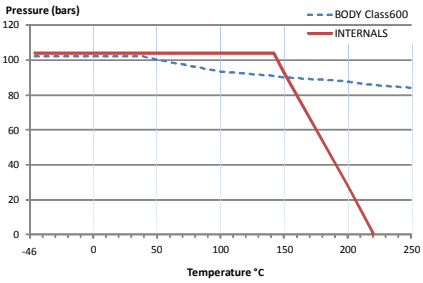

PEKOS GROUP CERTIFICATES:
ISO 9001-2008 / 2014/68/EU /API-6D

DIMENSIONS & Technical information

DN	CL	D	L	E	A	B	C	F	H	G	V	X	Y	Z	n x d	ISO 5211	Torque	MAST	Weight
2"	600	49	191	-	61,5	60	16	58	233	119	15	9	16	24	- x -	F05	78	64,7	10,0
2 1/2"	600	62	210	-	74	72	16	70	425	143	22	16	22	31	- x -	F07	91	233,7	13,5

*** Depending on service conditions.* ** Dimensions are in mm.* ** Torque & MAST are in Nm* ** Weight is in Kilogram*
** Torque values have been measured ΔP at maximum rating at room temperature*

DS-327
Rev.9